Internally Glazed Chamfered
Residential Door with EP frames and sidelight

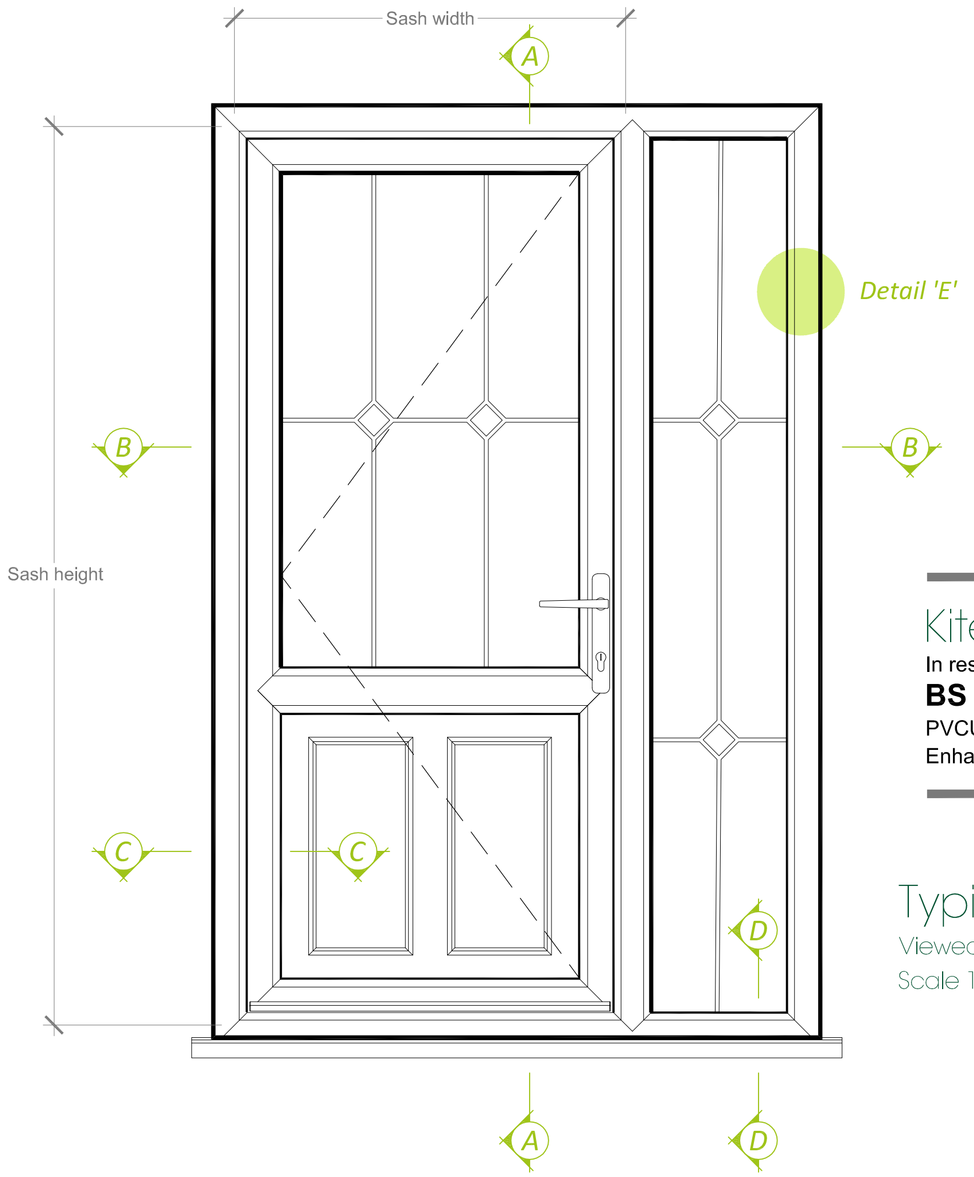

Typical Elevation
Viewed from Outside
Scale 1:10

Kitemark KM522040
In respect of:
BS EN 12608 / PAS24
PVCU Profile -
Enhanced Security Doors System Supplier

	Width (mm)	Height (mm)	Air Permeability classification	Watertightness classification	Resistance to wind classification	Exposure Category as given in table 1 of BS 6375-Part 1
Door Leaf	**1000**	**2150**	**4**	**2A**	**A3**	**1200**
Overall Doorset	**2525**	**2200**	**4**	**2A**	**A3**	**1200**
Sidelight	**400**	**2250**	**4**	**2A**	**A3**	**1200**

Alternative Bead Options
Triple glazing

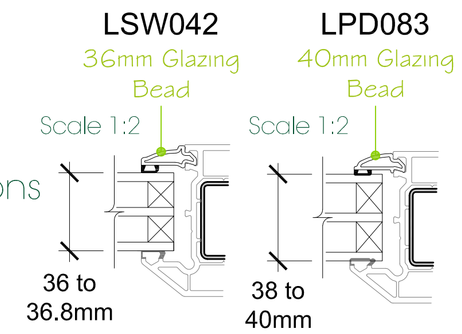

Detail 'E'

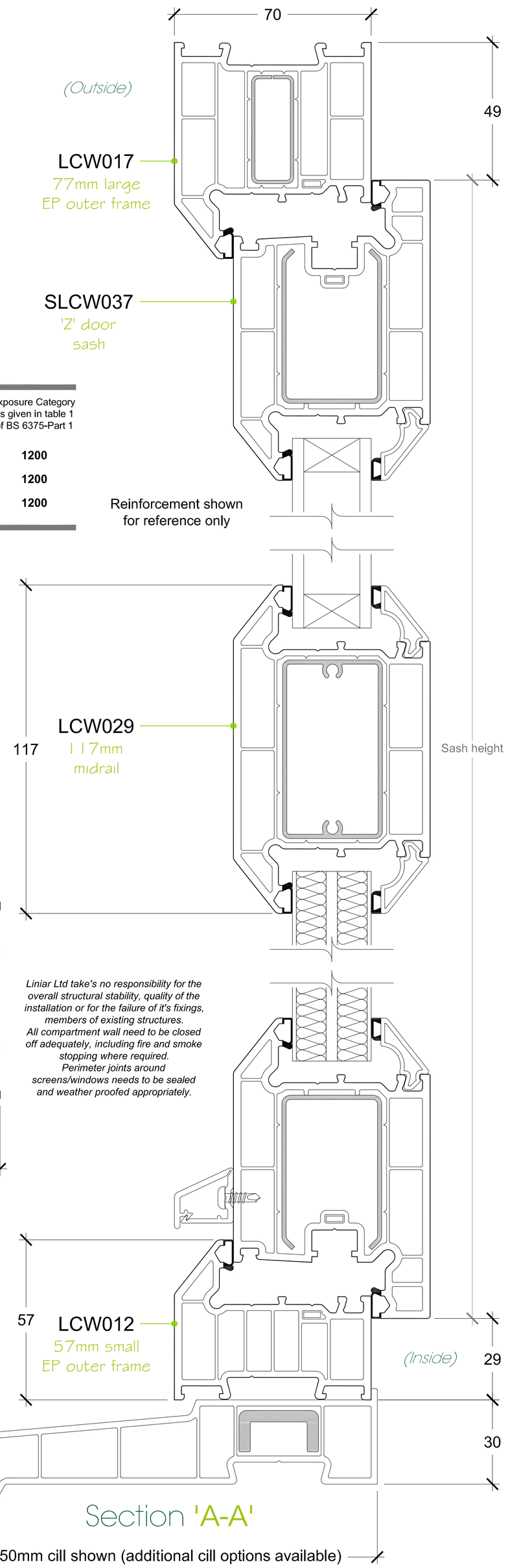

Section 'A-A'

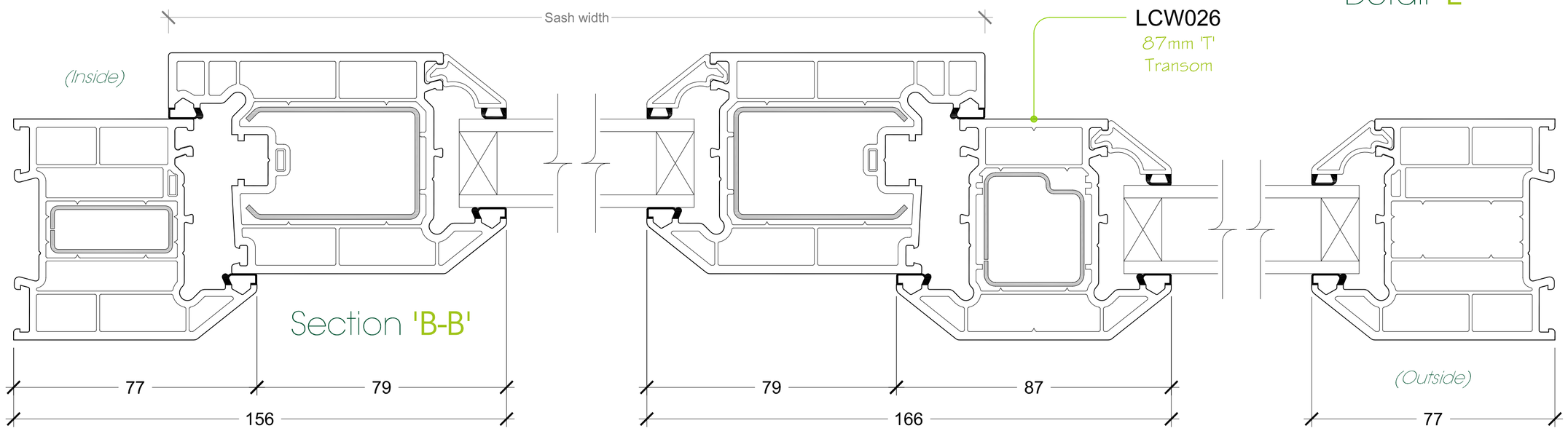

Section 'B-B'

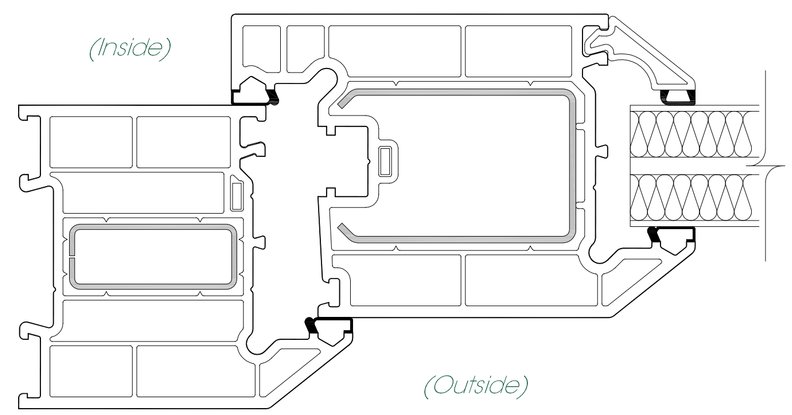

Section 'C-C'

The maximum sizes are based on 28mm 4-20-4 standard double glazed units within frames manufactured to the reinforcement guidelines.

Maximum Sizes for
Residential door - (sash size):
1002 w x 2156 h, max sash weight = 43.2kg

Finished frame sizes are subject to size, height of installation and geographical location. For further guidance contact Liniar's Design or Technical departments.

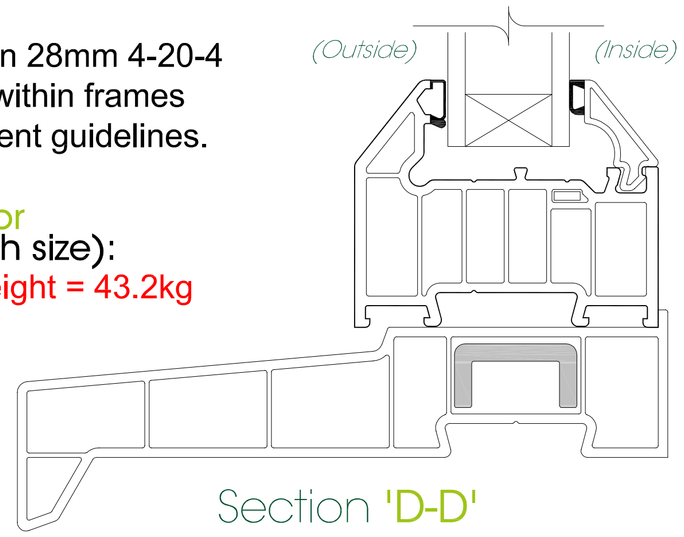

Section 'D-D'

Liniar Ltd take's no responsibility for the overall structural stability, quality of the installation or for the failure of it's fixings, members of existing structures. All compartment wall need to be closed off adequately, including fire and smoke stopping where required. Perimeter joints around screens/windows needs to be sealed and weather proofed appropriately.

Alternative Threshold Options

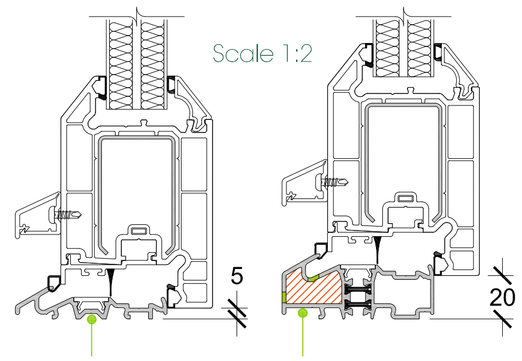

LAN271T
Part M threshold

LAN272T
Ali threshold

Detail 'F'

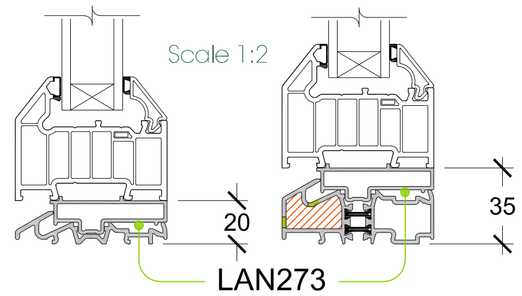

LAN273
Threshold packer

Detail 'G'

LAN275T
Part M Compliant threshold assembly

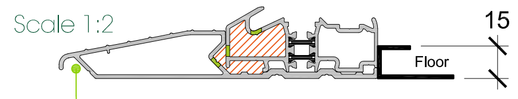

LAN278
Part M Compliant threshold assembly

Additional Enhancements

LAN102
Thermal Flipper

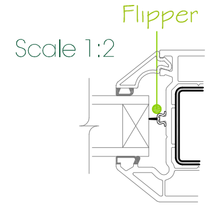

LAN107
Thermal Dam

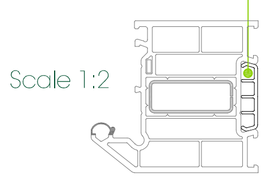

Data sheet Ref: LDS-020
Version: a
Issue Date: 29.04.2021
www.liniar.co.uk