Internally Glazed Chamfered French Door with EP frames

The maximum sizes are based on 28mm 4-20-4 standard double glazed units within frames manufactured to the reinforcement guidelines.

Maximum Sizes for
French door - (sash size):
998 w x 2146 h, max sash weight = 42.8kg

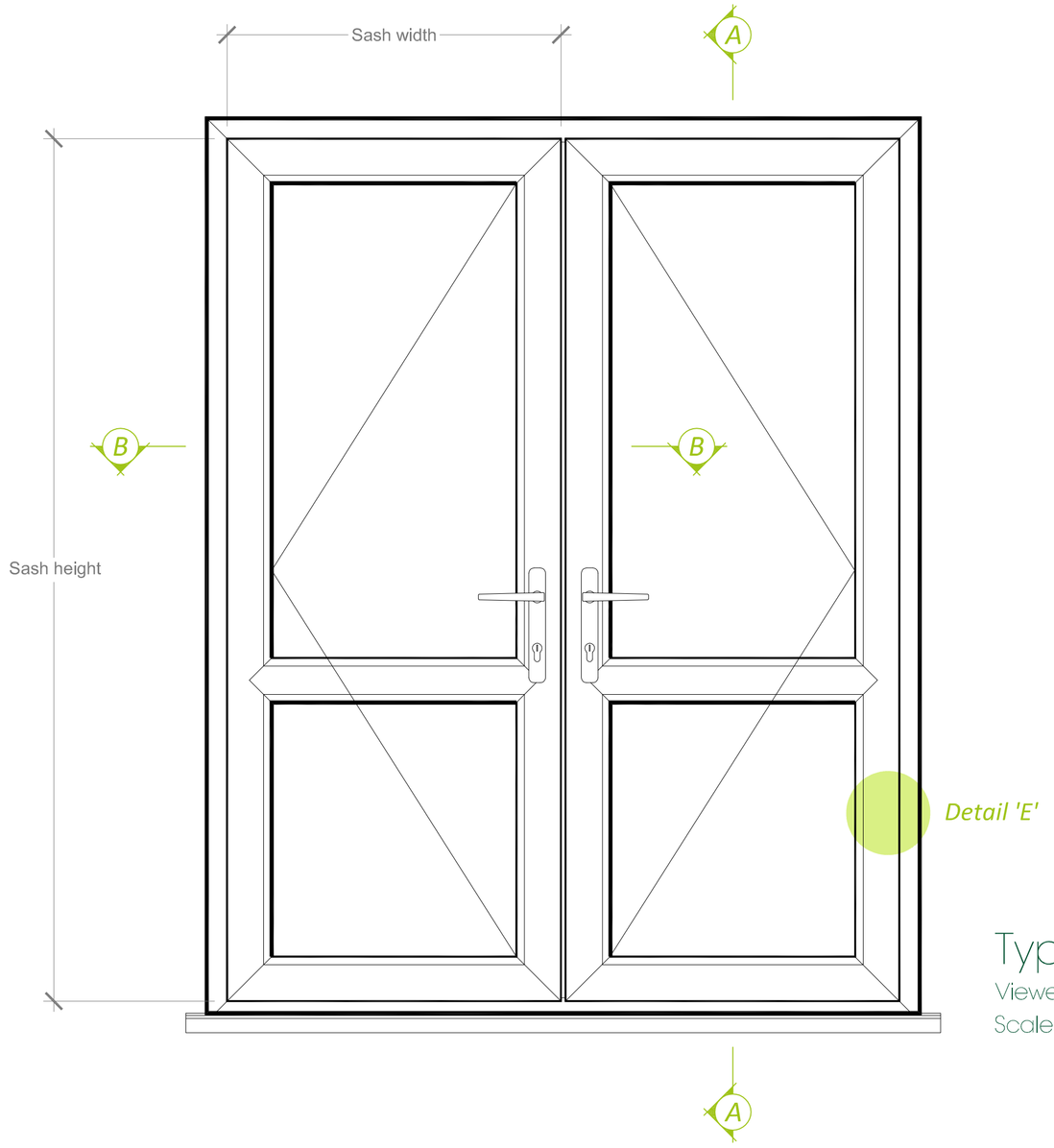

Typical Elevation

Viewed from Outside
Scale 1:10

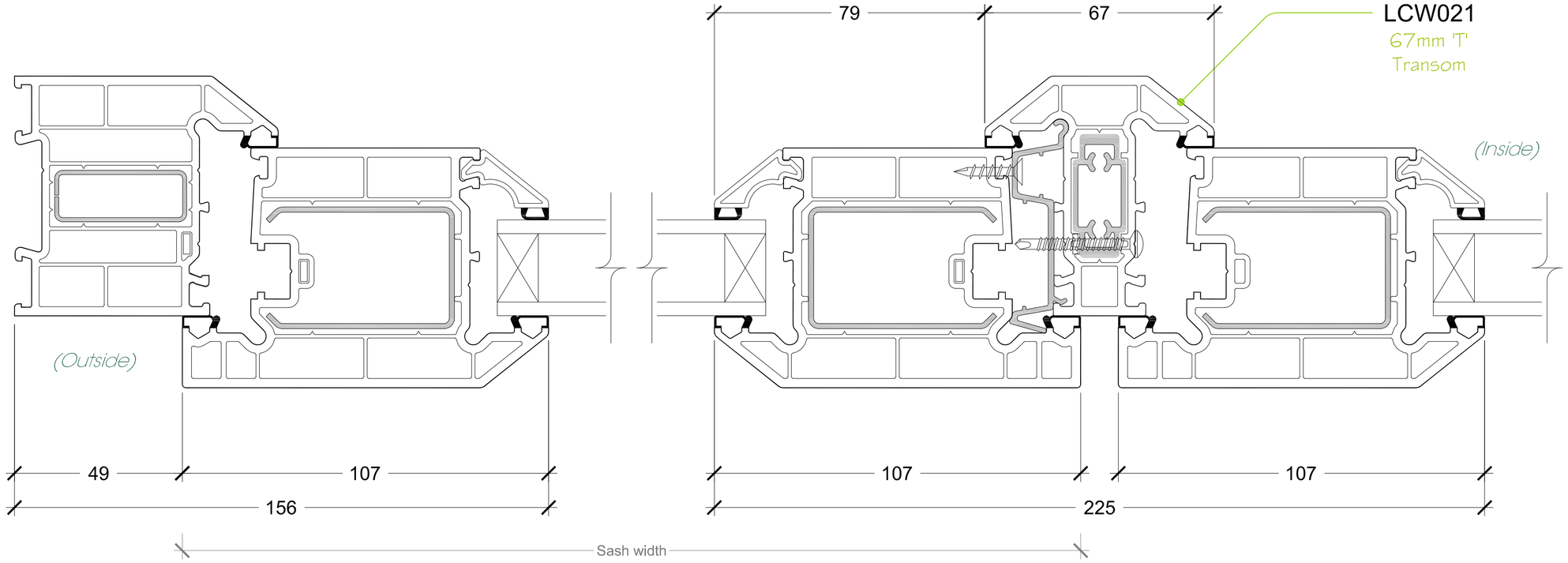

Section 'B-B'

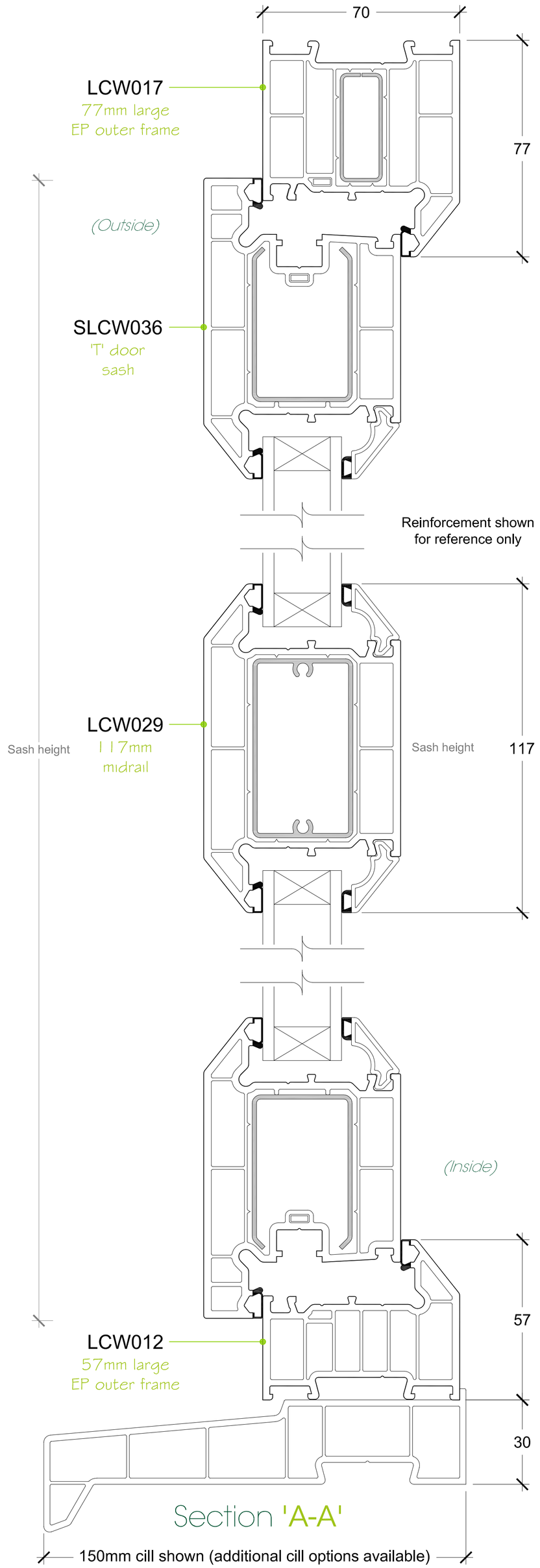

Section 'A-A'

Finished frame sizes are subject to size, height of installation and geographical location.
For further guidance contact Liniar's Design or Technical departments.

Alternative Threshold Options

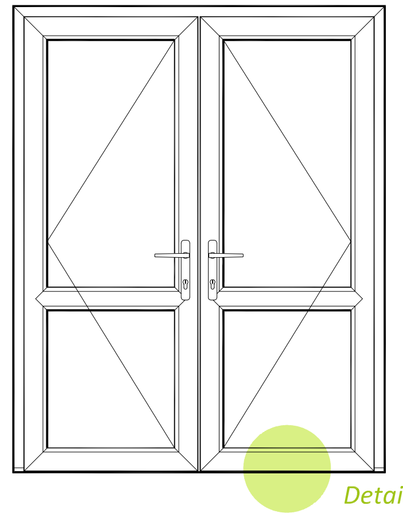

Scale 1:20

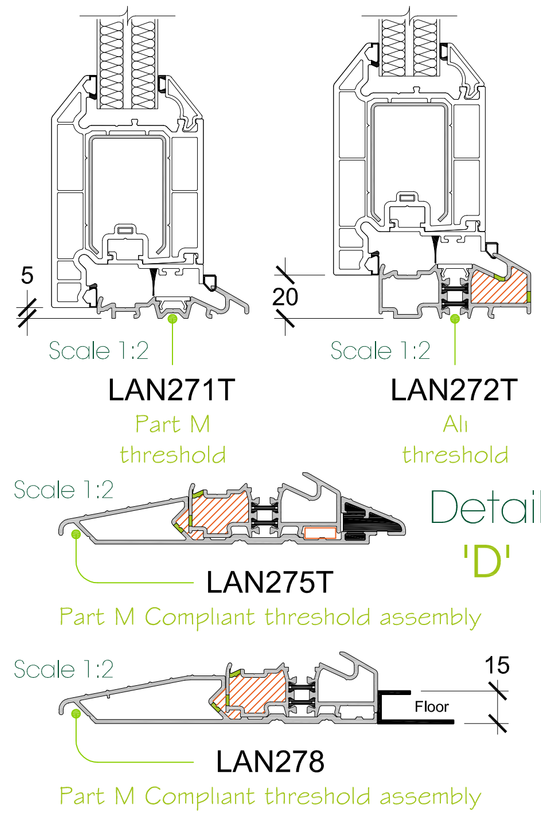

Alternative Bead Options
Triple glazing

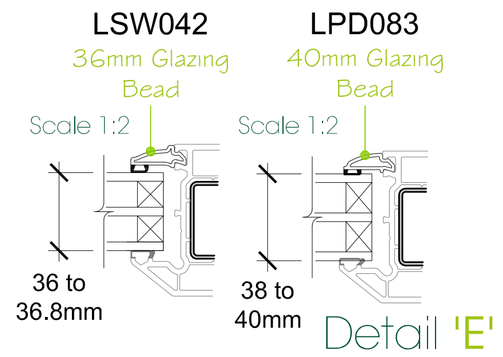

Additional Enhancements

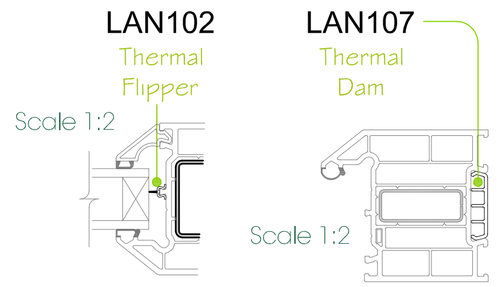

Kitemark KM522040
In respect of:
BS EN 12608 / PAS24
PVCU Profile -
Enhanced Security Doors System Supplier

	Width (mm)	Height (mm)	Air Permeability classification	Watertightness classification	Resistance to wind classification	Exposure Category as given in table 1 of BS 6375-Part 1
Door Leaf	**1000**	**2150**	**4**	**2A**	**A3**	**1200**
Overall Doorset	**2525**	**2200**	**4**	**2A**	**A3**	**1200**
Sidelight	**400**	**2250**	**4**	**2A**	**A3**	**1200**

Liniar Ltd take's no responsibility for the overall structural stability, quality of the installation or for the failure of it's fixings, members of existing structures.
All compartment wall need to be closed off adequately, including fire and smoke stopping where required.
Perimeter joints around screens/windows needs to be sealed and weather proofed appropriately.

Data sheet Ref: LDS-028
Version: a
Issue Date: 29.04.2021
www.liniar.co.uk